FIRETECH®

BY HIVIZ LED LIGHTING

2022 AMBULANCE PRODUCT CATALOG

TABLE OF CONTENTS

4

INTRODUCTION TO FIRETECH®

8

NEW WARNING LIGHTS

Guardian® Warning Lights
Guardian Hybrid Warning & Scene Lights

16

SURFACE AND RECESSED SCENE LIGHTS

Guardian Series

20

BAR STYLE FIXTURES

Brow Lights
MiniBrow® Lights

24

GRILLES

Ford
Dodge
Freightliner
International

28

INTERIOR & UNDERCARRIAGE LIGHTS

HD Strip Lights
Undercarriage Lights

ABOUT THE FIRETECH® BRAND
BY HIVIZ LED LIGHTING®

AT HIVIZ, WE HELP FIRST RESPONDERS WORK MORE SAFELY AND EFFECTIVELY AFTER DARK.

We do this by providing reliable lighting technologies for emergency vehicles. Our team is dedicated to developing the most innovative, highest quality LED scene lighting solutions on the market.

MORE LIGHT
With the highest luminous efficacy on the market, our fixtures produce more lumens per watt than others on the market. That means more light, where you need it, every single time.

BETTER WARRANTY
Our fixtures are built to last. Therefore, HiViz is proud to offer a Lifetime Warranty WITH advance exchange on all FireTech products. Advance exchange means that we ship you a new fixture first and then you send us the old one back after the swap. We can't promise that you'll never have a problem, but we can promise that we'll take care of it if you do.

SAME COST
Lumen for lumen, HiViz fixtures beat the competition in both performance and price. What does this mean? You get the light output you deserve at a price point you can afford.

DEVELOPED BY FIRST RESPONDERS
We've responded to roadside emergencies in the middle of the night, so we know the challenges that you face. Our team is comprised of first responders and we take our real world knowledge into account when designing and engineering our products.

LIGHTING QUALITY
AS A PRIORITY

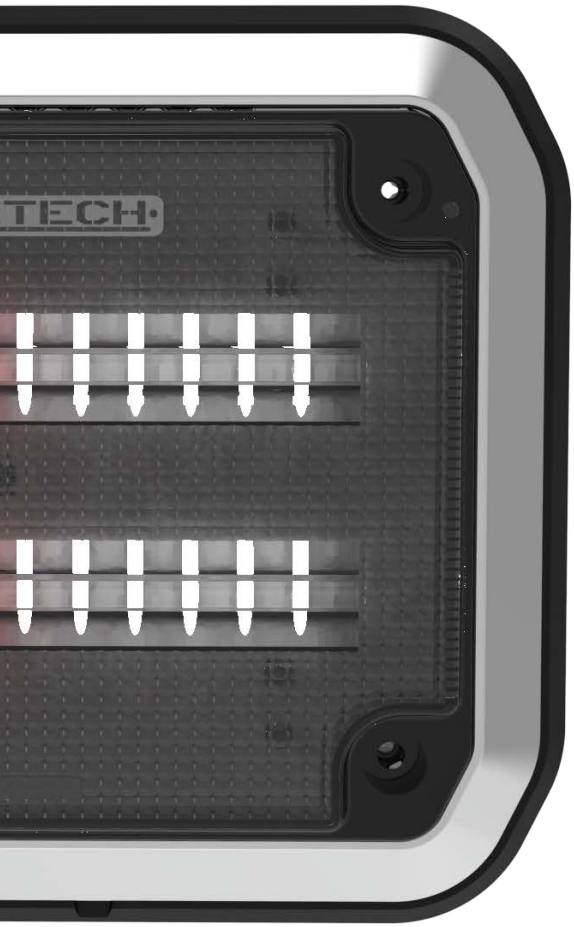

IP69K
SPRAY TESTED

INGRESS PROTECTION
Products are sprayed from close distances with 80~100 bar water pressure to verify the ingress protection rating, ensuring they are sealed properly.

UNDERWATER

SUBMERSION & AGING
Every product is run through a submersion (water dunk) test, then placed onto an aging rack and powered up for 30 minutes.

-40° ~ +80°C
OPERATION TEMP

THERMAL IMPACT
Products are placed in a -40°C chamber for 30 minutes and then placed in an 80°C chamber for an additional 30 minutes. Products are then powered up for 72 hours.

50,000 HR
LIFESPAN

LONG TERM DURABILITY
Products are switched on and off 150,000 times repeatedly to ensure that they remain functional after all testing.

Multi-Volt
9-32V
DC INPUT

CONSUMPTION & INPUT RANGE
All products are tested with a digital power meter to ensure that they are consuming the correct amount of power and have no electrical faults.

FIRETECH® FIVE

HiViz LED Lighting® supplies nearly 600 unique lighting fixtures. For the Ambulance market, we've slimmed the range and focused on five key parts sure to keep your crew illuminated on even the darkest of night. Additional configurations may be available from HiViz, but these parts are specifically optimized for use on your EMS fleet!

1

NEW GUARDIAN® WARNING LIGHTS

The Guardian Series Warning Lights are the newest addition to the FireTech lineup. With multiple LED colors to choose from these lights are the perfect addition to any rig.

2

SURFACE SCENE LIGHTS

The Guardian LED scene light uses a 7.25" x 5.25" mounting hole layout which matches the most common 7" x 9" 900 series fixtures in the industry. With a standard and a high output model available, your crews will have a serious edge up after dark.

3

BAR STYLE FIXTURES

The FireTech brand was made famous by the 72" Brow light and this same technology is available for EMS units with a simplified electrical layout and variety of mounting options. This range was specifically designed to shine on scenes in front of the rig!

4

GRILLES

Purpose built for the front of your Ambulance, the FireTech LED Grille kits are the perfect solution when looking for an upgrade to the factory headlights without altering the DOT compliance on the fixtures.

5

INTERIOR & UNDERCARRIAGE SCENE LIGHTS

The Sub-Aqua Undercarriage lights and HD Strip Compartment lights were designed for 25 years of operation in a variety of working environments. Whether it's under a truck or in a compartment these lights are built to last.

VISIT OUR WEBSITE TO VIEW ALL OF OUR PRODUCTS

WARNING LIGHTS

FireTech® Guardian® series warning lights are designed for battle, because we know how much smoother the job is when your lights pass the morning check-off every time.

WHY CHOOSE THE GUARDIAN SERIES?

BACKED BY THE FIRETECH LIFETIME WARRANTY

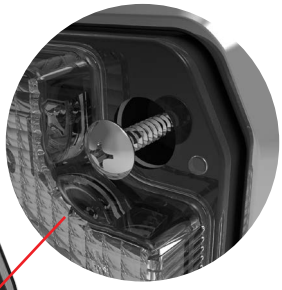

CRACK-FREE CORNER DESIGN

Screws never come in contact with corner plastic, preventing cracking and moisture intrusion.

PRECISION LINEAR OPTICS

Using a linear optic this fixture can generate an ultra-wide beam that is visible for miles.

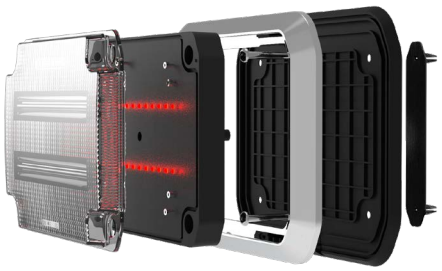

FLASH MODES FOR GUARDIAN HYBRID AND WARNING LIGHTS

(EXCEPT FOR HYBRID GUARDIAN JR)

Solid Flash

Left/Right

Up/Down

X - Pattern

SEE THE DIFFERENCE
INDUSTRIAL GRADE PERFORMANCE

NITTO TEMISH VENT
The Nitto TEMISH Vent allows moisture to vent ensuring no unwanted condensation or water droplets trapped in the lens. The second most common killer of LED lights in our industry is moisture. With the TEMISH vent, leave your worries at the station.

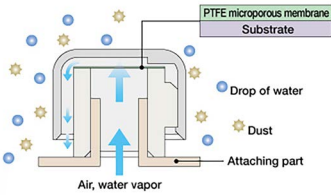

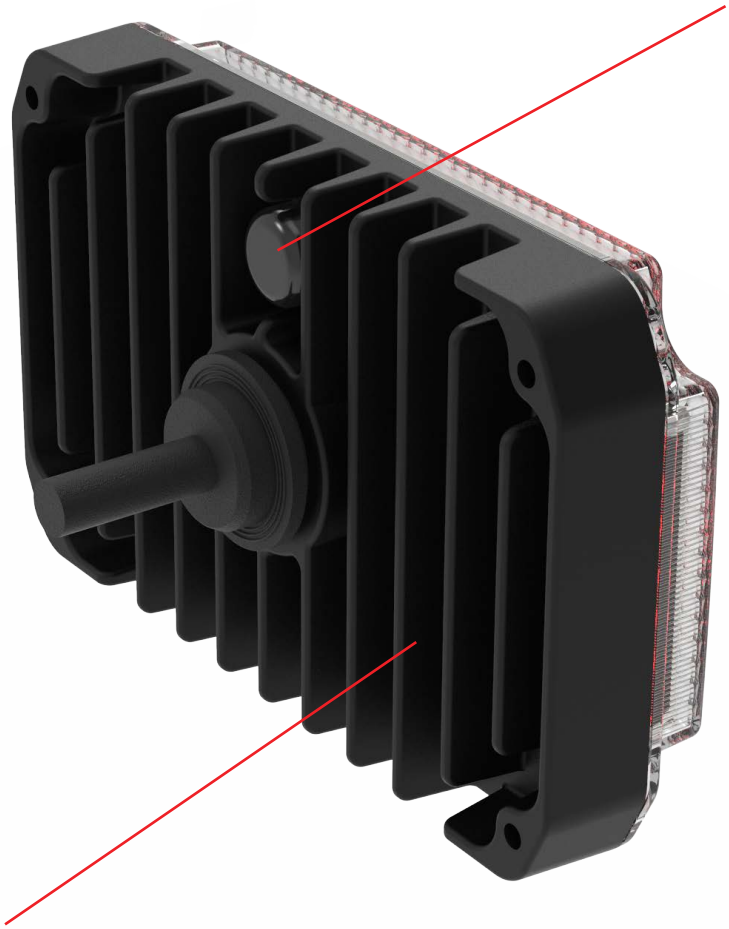

HIGH PERFORMANCE ALUMINUM HEAT SINK
Most warning lights use a plate of sheet metal to keep the fixture cool. The #1 killer of LED lighting in the public safety industry is elevated circuit temperature, and we tooled this fixture to be capable of withstanding anything you throw at it.

ENGINEERED IN THE UNITED STATES
LIFETIME WARRANTY WITH ADVANCE EXCHANGE

NEW GUARDIAN® WARNING LIGHTS

SURFACE MOUNTED WARNING LIGHTS

KEY FEATURES

- Crack-proof Corners
- Vented Housing
- Industrial Grade Aluminum Heat Sink
- Day / Night Modes Available

THE ULTIMATE AMBULANCE WARNING LIGHT

After many years of requests, we're excited to unveil the ultimate ambulance warning light system! These fixtures are super durable and are the only fixtures in their class to feature a full sized aluminum heat sync. We know from our background in the fire space that overheated circuitry is the number one killer of LEDs in public safety vehicles and moisture intrusion is a close runner up. With the FireTech® Guardian Series of warning lights, you can rest assured we've goth both areas covered, and if we're wrong we will replace the fixture with our industry-leading advance exchange lifetime warranty.

WARNING LIGHT OPTIONAL ACCESSORIES

RETROFIT GASKET
P/N: P-GSM-RGKIT

For replacing legacy fixtures which may have had a different sized cutout. Covers old or oversized holes in the body.

BEZEL DELETE GASKET
P/N: P-GSM-BDKIT

Allows installation of Guardian Warning Light without bezel for a reduced mounting profile.

GUARDIAN BLACKOUT BEZEL
P/N: P-GSM-BOBEZEL

Matte black replacement bezel for FireTech Guardian Series Product.

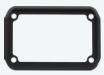

GUARDIAN JR. BLACKOUT BEZEL
P/N: P-GSMJR-BOBEZEL

Matte black replacement bezel for FireTech Guardian Jr Series Product.

FLASH PATTERNS & COLOR OPTIONS

- 7 Flash Patterns
- Traditional and Ramping flash patterns available
- Day / Night Modes Available

STANDARD OPTIONS

Red

Amber

Blue

White

CUSTOM OPTIONS

RB: Red & Blue

RA: Red & Amber

RW: Red & White

BA: Blue & Amber

BW: Blue & White

AW: Amber & White

GUARDIAN® WARNING LIGHT

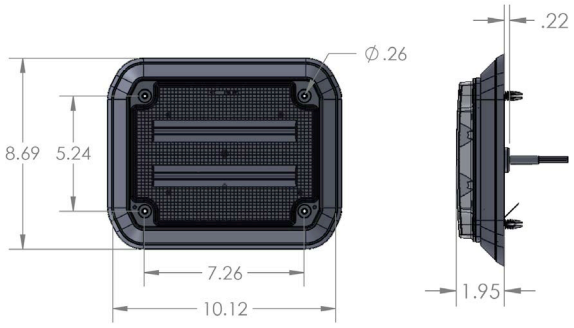

FT-GSM-WN-**
****-LED COLOR**

■ Red	■ Blue	■ Amber	□ White	■■ RB
■■ RA	■□ RW	■■ BA	■□ BW	■□ AW

GUARDIAN | WARNING LIGHT	
DIMENSIONS	8.69" x 10.12" x 1.95"
WEIGHT	4.0 LBS.
BEZEL	CHROME
INPUT VOLTAGE DC	9-32V DC
CERTIFICATIONS	SAE J595 CLASS 1; SAE J578
LED COLOR OPTIONS	RED, BLUE, AMBER, WHITE, RED & BLUE, RED & AMBER, RED & WHITE, BLUE & AMBER, BLUE & WHITE, AMBER & WHITE

GUARDIAN JR WARNING LIGHT

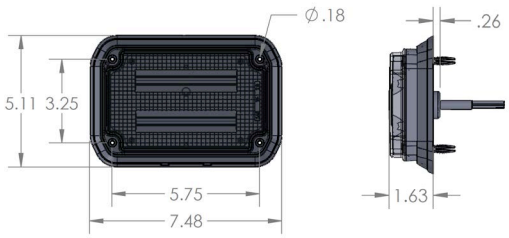

FT-GSMJR-WN-**
****-LED COLOR**

■ Red	■ Blue	■ Amber	□ White	■■ RB
■■ RA	■□ RW	■■ BA	■□ BW	■□ AW

GUARDIAN JR | WARNING LIGHT	
DIMENSIONS	5.11" x 7.48" x 1.63"
WEIGHT	1.4 LBS.
BEZEL	CHROME
INPUT VOLTAGE DC	9-32V DC
CERTIFICATIONS	SAE J595; SAE J578
LED COLOR OPTIONS	RED, BLUE, AMBER, WHITE, RED & BLUE, RED & AMBER, RED & WHITE, BLUE & AMBER, BLUE & WHITE, AMBER & WHITE

NEW GUARDIAN® HYBRID LIGHTS

WARNING & SCENE HYBRID LIGHTS

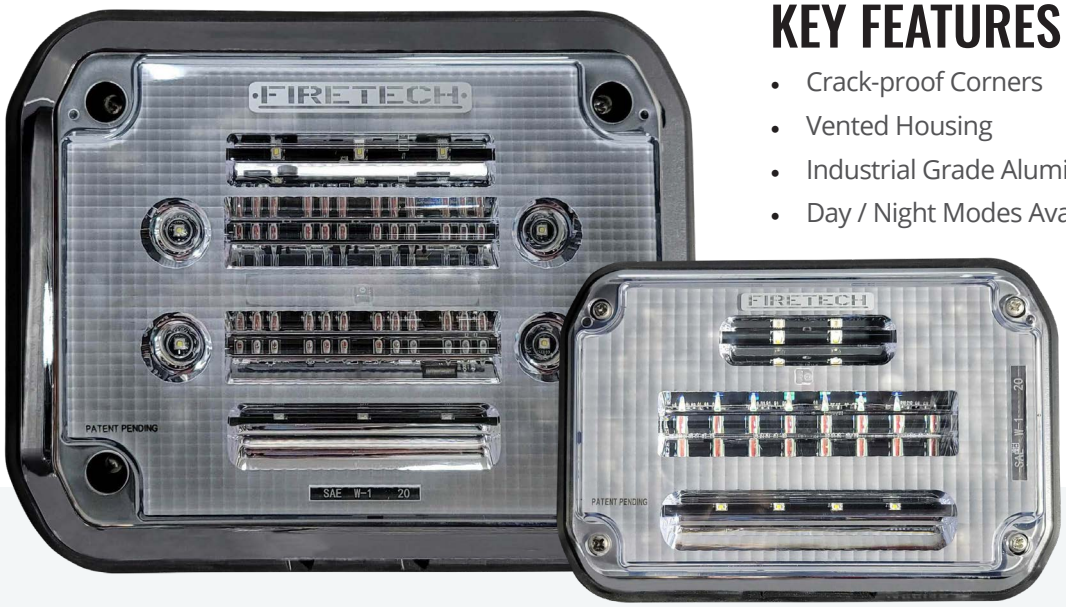

KEY FEATURES

- Crack-proof Corners
- Vented Housing
- Industrial Grade Aluminum Heat Sink
- Day / Night Modes Available

TWO FIXTURES IN ONE!

The FireTech Guardian Hybrid Warning / Scene Light allows you to combine light functions, meaning you can buy fewer lights and spend less money overall. A superior build quality with increased reliability and performance makes these lights ideal for the EMS market. Consider a FireTech® Guardian Hybrid Warning / Scene Light for your next project if budget or real estate are your limiting factors!

HYBRID OPTIONAL ACCESSORIES

RETROFIT GASKET
P/N: P-GSM-RGKIT

For replacing legacy fixtures which may have had a different sized cutout. Covers old or oversized holes in the body.

BEZEL DELETE GASKET
P/N: P-GSM-BDKIT

Allows installation of Guardian Warning Light without chrome bezel for a reduced mounting profile.

GUARDIAN BLACKOUT BEZEL
P/N: P-GSM-BOBEZEL

Matte black replacement bezel for FireTech Guardian Series Product.

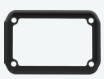

GUARDIAN JR. BLACKOUT BEZEL
P/N: P-GSMJR-BOBEZEL

Matte black replacement bezel for FireTech Guardian Jr Series Product.

FLASH PATTERNS & COLOR OPTIONS

- 7 Flash Patterns
- Traditional and Ramping flash patterns available
- Day / Night Modes Available

STANDARD OPTIONS

Red

Amber

Blue

White

CUSTOM OPTIONS (GUARDIAN HYBRID ONLY)

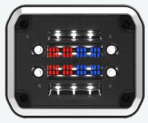

RB: Red & Blue

RA: Red & Amber

RW: Red & White

BA: Blue & Amber

BW: Blue & White

AW: Amber & White

GUARDIAN® HYBRID WARNING & SCENE LIGHT

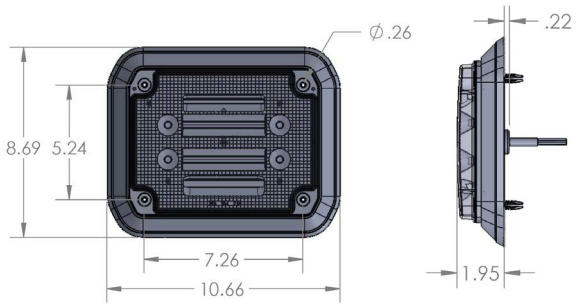

FT-GSM-HY-**
****-LED COLOR**

■ Red ■ Blue ■ Amber □ White ■■ RB
■■ RA ■□ RW ■■ BA ■□ BW ■□ AW

GUARDIAN HYBRID | WARNING & SCENE LIGHT	
DIMENSIONS	8.69" x 10.66" x 1.95"
WEIGHT	4.0 LBS.
BEZEL	CHROME
INPUT VOLTAGE DC	9-32V DC
WARNING LIGHT CERTIFICATIONS	SAE J595 CLASS 1; SAE J578
SCENE LIGHT CERTIFICATION	AMD 024
LED COLOR OPTIONS	RED, BLUE, AMBER, WHITE, RED & BLUE, RED & AMBER, RED & WHITE, BLUE & AMBER, BLUE & WHITE, AMBER & WHITE

GUARDIAN JR HYBRID WARNING & SCENE LIGHT

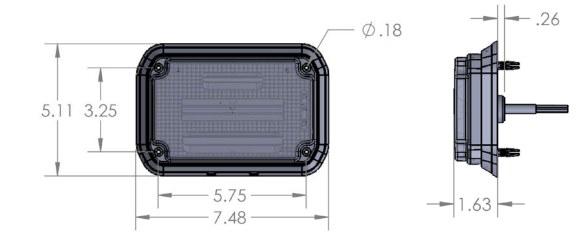

FT-GSMJR-HY-**
****-LED COLOR**

■ Red ■ Blue ■ Amber □ White

GUARDIAN JR HYBRID | WARNING & SCENE LIGHT	
DIMENSIONS	5.11" x 7.48" x 1.63"
WEIGHT	1.4 LBS.
BEZEL	CHROME
INPUT VOLTAGE DC	9-32V DC
WARNING LIGHT CERTIFICATIONS	SAE J595 CLASS 1; SAE J578
SCENE LIGHT CERTIFICATION	AMD 024
LED COLOR OPTIONS	RED, BLUE, AMBER, WHITE

SURFACE AND RECESSED SCENE LIGHTS

It's impossible to do this job in the dark! The FireTech® brand was founded on the premise that first responders need to be able to see in order to save lives, and has a rich history manufacturing the brightest and most reliable scene lights in the industry. When failure isn't an option, choose FireTech scene lighting!

GUARDIAN® SERIES
SURFACE MOUNTED SCENE LIGHTS

FT-GVSM

NEW VALUE LINE GUARDIAN SCENE LIGHT KEY FEATURES

- Costs Like Halogen, Performs Like LED
- Traffic Busting Spot Mode
- Comfortable Asymmetric Scene Light Mode
- Low Profile, High Output

GUARDIAN VALUE LINE SCENE LIGHT MADE FOR AMBULANCES

The Guardian Value Line scene light is made specifically for EMS fleets who want the best, but are concerned about the cost of high performance lighting. We use an extremely efficient 32 watt circuit design to give you more light where it counts, without the need for the large heat sync used in the full sized Guardian and Guardian Elite products. This fixture is specifically designed for ambulances and features a "spot" circuit for finding address numbers, and a "scene" circuit that can be tied to door triggers or used during patient loading. You can fire both circuits up together for simple control and maximum visibility, and it all comes at a price that doesn't break the bank. This fixture couples perfectly with the FireTech Warning Lights shown on pages 8-15!

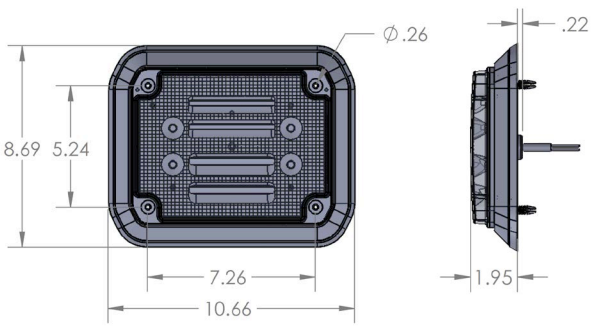

GUARDIAN LC | BASE OUTPUT | FT-GVSM	
RAW LUMENS	5,700
EFFECTIVE LUMENS	3,380
HOUSING COLOR	CHROME
WATTAGE	24W SCENE : 8W SPOT
AMP DRAW (@12V)	2.66A
INPUT VOLTAGE DC	11-32V DC

DIMENSIONS FOR GUARDIAN JR

FT-GSMJR-*
*-HOUSING COLOR (B, W)

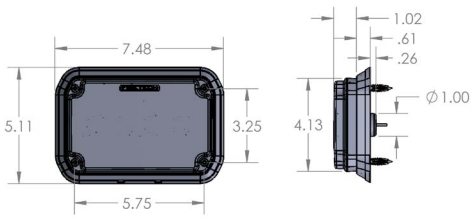

GUARDIAN JR | STANDARD OUTPUT | FT-GSMJR-*	
LEDS	10 CREE
RAW LUMENS	5,000
EFFECTIVE LUMENS	3,125
OPT. HOUSING COLORS	BLACK OR CHROME
DIMENSIONS	7.40" x 5.04" x 1.54"
WATTAGE	35W
AMP DRAW (@12V)	3.33A
INPUT VOLTAGE DC	9-32V DC

DIMENSIONS FOR GUARDIAN® AND GUARDIAN ELITE

FT-GSM-* & FT-GESM-*
*-HOUSING COLOR (B, W)

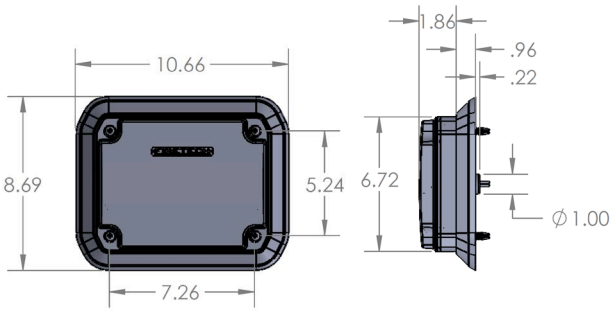

GUARDIAN | STANDARD OUTPUT | FT-GSM-*	
RAW LUMENS	10,000
EFFECTIVE LUMENS	6,500
OPT. HOUSING COLORS	BLACK OR CHROME
WATTAGE	75W
AMP DRAW (@12V)	5.83A
INPUT VOLTAGE DC	9-32V DC

GUARDIAN ELITE | HIGH OUTPUT | FT-GESM-*	
RAW LUMENS	20,500
EFFECTIVE LUMENS	12,290
OPT. HOUSING COLORS	BLACK OR CHROME
WATTAGE	120W
AMP DRAW (@12V)	10.41A
INPUT VOLTAGE DC	9-32V DC

GUARDIAN OPTIONAL ACCESSORIES

RETROFIT GASKET
P/N: P-GSM-RGKIT

For replacing older style fixture or halogen side scene light. Covers old or oversized holes in the body.

BEZEL DELETE GASKET
P/N: P-GSM-BDKIT

Allows installation of Guardian/Guardian Elite Scene Light without chrome bezel for a reduced mounting profile.

BAR STYLE FIXTURES

FireTech® bar style fixtures are the perfect lighting solution for the front of your ambulance. Featuring spot, flood, and scene optics, they have the power to illuminate anything in the apparatus' path.

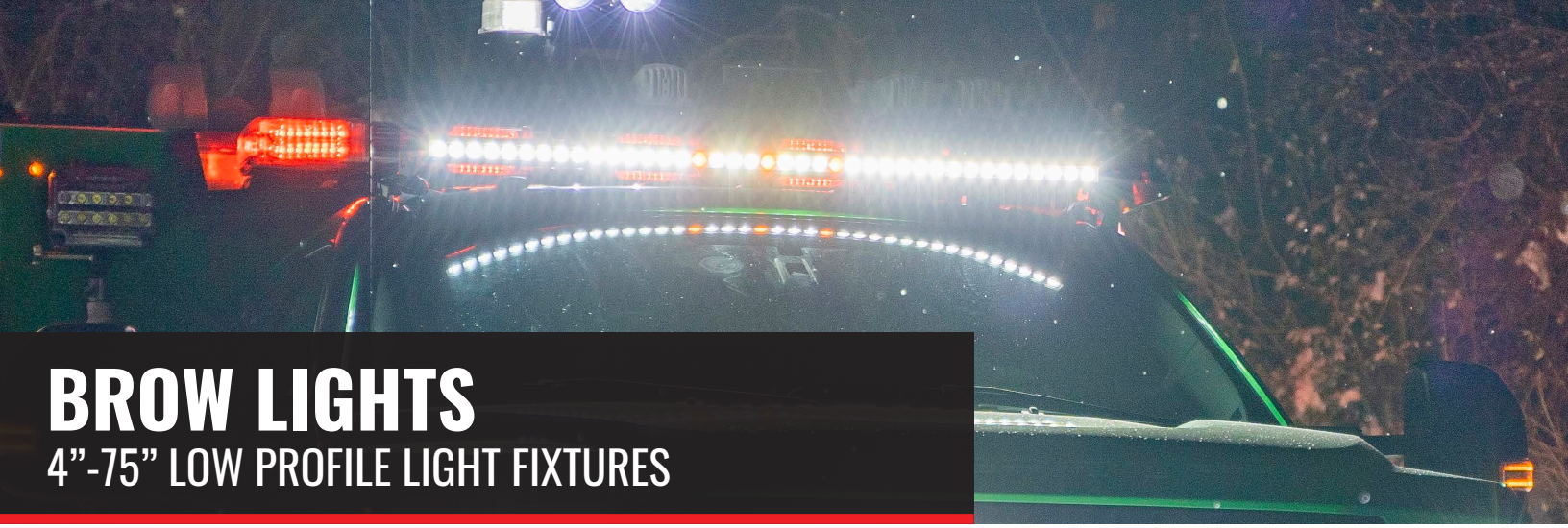

BROW LIGHTS
4”-75” LOW PROFILE LIGHT FIXTURES

KEY FEATURES

- Optional Marker Lights
- Adjustable Mounts Along Body
- All Aluminum Construction

DESIGNED FOR EMERGENCY MEDICAL SERVICES

Our Brow Light and MiniBrow Scene Lights are designed by first responders for other first responders. That means that we’re acutely aware of what you need from your lights and how to best provide it in a package that can fit on many different styles of apparatus. We know that you don’t need to worry about whether your scene light will work in an emergency, but only need to worry about the illumination necessary to do your job. That’s why the FireTech Brow and MiniBrow series are backed by the industry’s leading limited LIFETIME warranty. The shallow mounting depth and low-profile design allow the FireTech bar style fixtures to provide powerful light output while integrating neatly into the lines of your ambulance cab and body.

STANDARD BROW LIGHT MODELS

FT-B-46-* | 36 LEDS | 19,008 RAW LM

46”

FT-B-46-ML3-* | 39 LEDS | 19,008 RAW LM

50”

DIMENSIONS

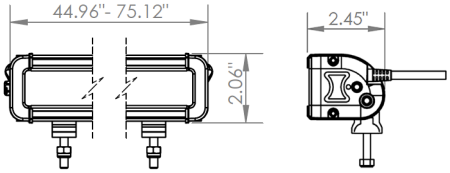

ITEM #	DESCRIPTION	ACTUAL LENGTH
FT-B-46-ML-*	46” Brow Light, 5 integrated marker lights, 4 circuits	44.96”/1,142.40mm
FT-B-46-ML3-*	46” Brow Light, 3 integrated marker lights, 4 circuits	50.01”/1,270.25mm

SINGLE STACK MINIBROW®

4”-50” MINIBROW SCENE LIGHTS

KEY FEATURES

- Ultra Low Profile Design
- Configurable Optics
- Adjustable Mounting Rail

MODELS

FT-MB-6-**-* | 6 LEDS | 3,168 RAW LM

8”

FT-MB-9-**-* | 9 LEDS | 4,752 RAW LM

12”

FT-MB-27-**-* | 27 LEDS | 14,256 RAW LM

35”

DIMENSIONS

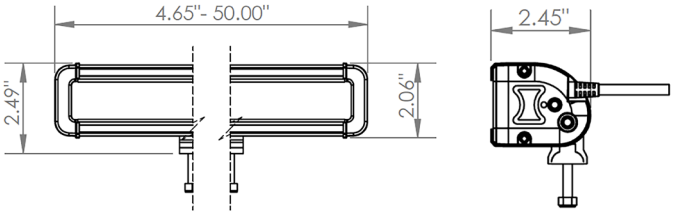

ITEM #	ACTUAL LENGTH	WATTS	AMP DRAW
FT-MB-6-**-*	8.43”	30	2.5
FT-MB-9-**-*	12.21”	45	3.75
FT-MB-27-**-*	34.89”	135	11.25

3 PIECE MINIBROW OPTION (AS SEEN ABOVE)

Some ambulances include an AC Condenser above the cab and there are a limited number of fixtures which fit cleanly on the cab, and who’s optics are optimized not to waste light on the roof of the apparatus. With the FireTech MiniBrow light system, you can light both the area directly in front of the vehicle, as well as the areas 45 degrees out from the operators position. Mounting 2x MiniBrows on the sides of the condenser give superior lighting when looking for addresses, wrecks off the side of the road, or any other night-time incident. We recommend combining Spot and Flood optics to ensure no area of the scene is left in the dark.

WHAT TO ORDER:

FT-MB-27-FT-* (Quantity 1)
FT-MB-9-F-* (Quantity 2)

GRILLES

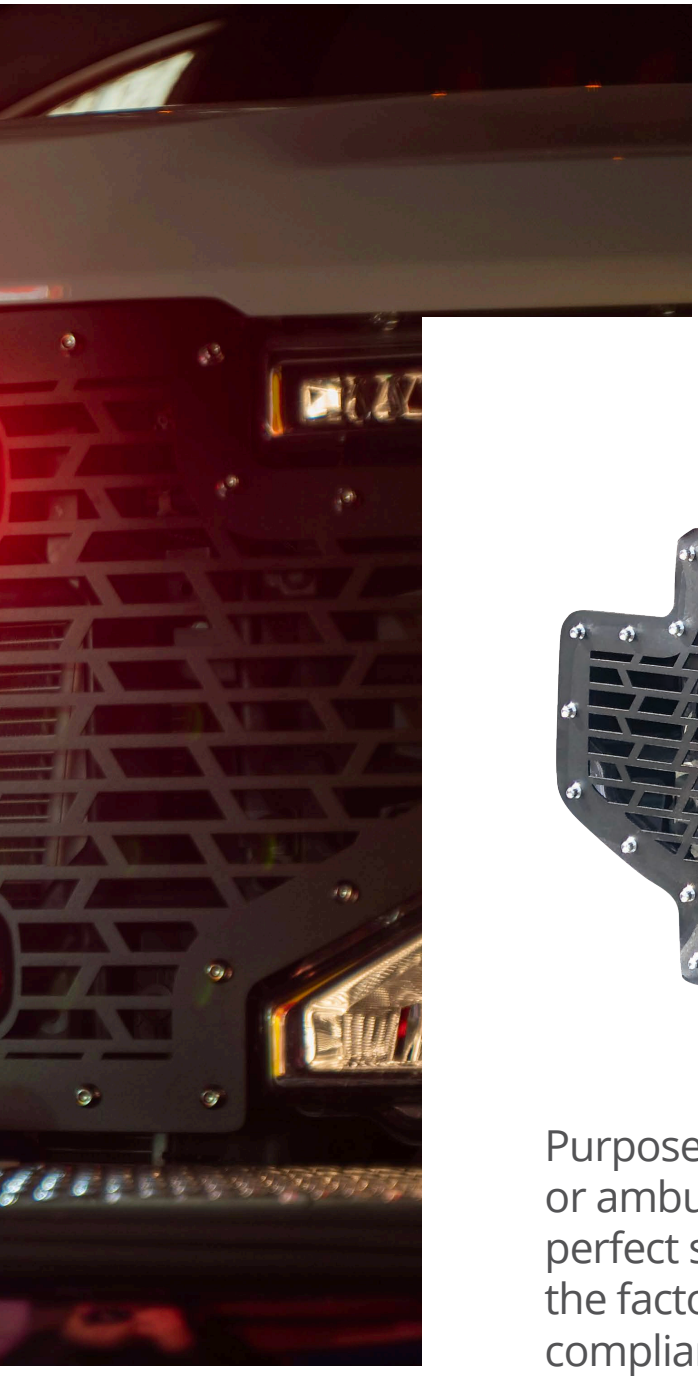

Purpose built for the front of your fire apparatus or ambulance, the FireTech® LED Grille kits are the perfect solution when looking for an upgrade to the factory headlights without altering the DOT compliance on the fixtures.

FIRETECH® GRILLES
GRILLE REPLACEMENTS

KEY FEATURES

- OEM Location Mounting Uses Factory Installed Mounts
- Meets and Exceeds Necessary Airflow Standards
- Two Single-LED Long Distance Light Cannons
- Two Multi-LED Wide Spot Light Cannons

PURPOSE BUILT FOR YOUR APPARATUS

The FireTech LED Grilles are designed with (4) 7X4 warning lights and (4) off-road light cannons. Two cannons sport a single, highly-focused LED for long distance projection, while the other two multi-optic cannons project light in a wide spot beam to fill in the foreground. These fixtures are a bolt-on solution, giving maximum visibility to the front of your fire or emergency vehicle.

WATCH THE INSTALLATION VIDEO AND LEARN MORE ABOUT FIRETECH GRILLES

FIRETECH GRILLE REPLACEMENT OPTIONS

'11-'16 FORD SUPER DUTY

'17-'19 FORD SUPER DUTY

'20+ FORD SUPER DUTY

'13-'18 DODGE RAM HD

'19+ DODGE RAM HD

'03+ FREIGHTLINER M2

'19+ INTERNATIONAL M7

CONFIGURE PART NUMBER

1.) PICK YOUR MODEL

"03FM2"
'03+ FREIGHTLINER M2

"09F150"
'09-'12 FORD F150

"11FSD"
'11-'16 FORD SUPER DUTY

"17FSD"
'17-'19 FORD SUPER DUTY

"17FSDC"
'17-'19 FORD SUPER DUTY W/CAMERA

"20FSD"
'20+ FORD SUPER DUTY

"20FSDC"
'20+ FORD SUPER DUTY W/CAMERA

"13DHD"
'13-'18 DODGE RAM

(PICK YOUR MODEL CONTINUED)

"19DHD"
'19+ DODGE RAM

"19IM7"
'19+ INTERNATIONAL M7

2.) PICK YOUR WARNING LIGHTS (OPTIONAL)

EACH LIGHT (1-4) IS CONFIGURABLE WITH:

"FR7C-R" - CLEAR LENS, RED LED
"FR7C-B" - CLEAR LENS, BLUE LED

3.) PICK YOUR WARNING LIGHT BEZEL COLOR

"FR7MC"
CHROME TRIM BEZEL

"FR7MB"
BLACK TRIM BEZEL

PICK YOUR MODEL, THEN USE THE CONFIGURATION SHEET TO PICK YOUR (4) WARNING LIGHTS & BEZEL COLOR

MODEL ↓ WARNING LIGHTS ↓ BEZEL ↓

FT-CG2GKIT-_____-_____-_____

INTERIOR AND UNDERCARRIAGE LIGHTS

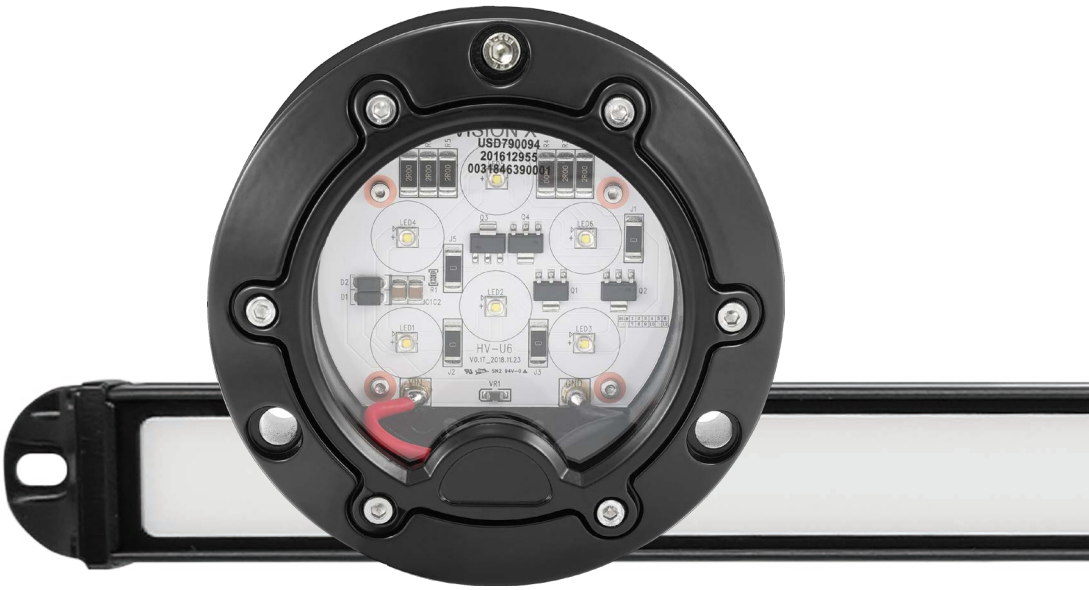

With FireTech® Compartment & Undercarriage lights, you'll never see sections unhooking from each other or pieces of the light going out. Mount it inside or out, we'll stand behind it forever.

COMPARTMENT & UNDERCARRIAGE
DURABLE AND COMPACT LIGHTS

FT-CU-HD-***
**-LENGTH OF STRIP
*-LED COLOR OPTIONS (RW, RED, BLUE, GREEN)

KEY FEATURES

- Heavy Duty and Ultra Durable
- Ultra Low Profile Design
- LED Color Options Available

DURABLE, SLIM, AND NOW WITH COLORED LEDS

Looking to add more function and style to your new apparatus? We've got you covered! The upgraded HD strip lights are now available with new color LED options that are sure to fit any needs. Choose between a combo red & white LED for more flexibility or a single circuit red, blue, or green output. Completely waterproof, the new HD strip light can be used inside or outside of the apparatus without risk of failure.

MODELS

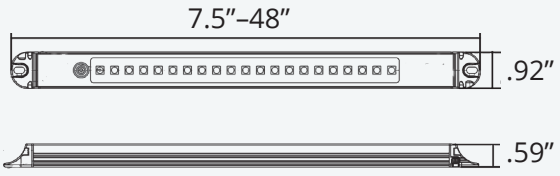

FT-CU-HD7.5-* | 9 LEDS | 71 EFFECTIVE LM

7.5"

FT-CU-HD12-* | 21 LEDS | 207 EFFECTIVE LM

12"

FT-CU-HD24-* | 48 LEDS | 379 EFFECTIVE LM

24"

FT-CU-HD36-* | 75 LEDS | 686 EFFECTIVE LM

36"

FT-CU-HD48-* | 96 LEDS | 743 EFFECTIVE LM

48"

SUB-AQUA UNDERCARRIAGE LIGHT | FT-CU-AQX-**-*

SUBMERSIBLE UP TO 100’

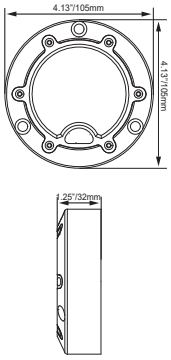

FT-CU-AQX-*
*-HOUSING COLOR (B, W)

SUB-AQUA UNDERCARRIAGE LIGHT	
LEDS	6 X 3W
RAW LUMENS	1,500
EFFECTIVE LUMENS	1,050
OPT. HOUSING COLORS	BLACK OR WHITE
OPT. LIGHT COLORS	RED/WHITE OR ALL WHITE
WATTAGE	22W
AMP DRAW (@12V)	1.833A
INPUT VOLTAGE DC	11-32V DC

Available in a Red/White LED Option (use order # FT-CU-AQX-RW-*)
Order P/N FT-CU-AQX-*-KIT for light + mounting bracket

SHOCKWAVE INTERIOR LIGHT | FT-CSW-112-*-**-B

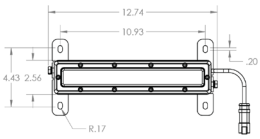

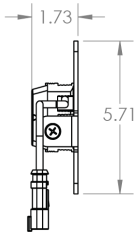

FT-CSW-112-*--B**
*-FROSTED LENS OPTION (F)
**-LED COLOR OPTION (BW)

- ULTRA HIGH OUTPUT INTERIOR LIGHTING
- CUBE SHAPED LEDS PRODUCE 180° OF LIGHT
- DC OR AC OPERATION
- DIMMABLE

SHOCKWAVE INTERIOR LIGHT	
LEDS	48 LEDS
RAW LUMENS	1,500
EFFECTIVE LUMENS	1,050
HOUSING COLOR	BLACK
OPT. LIGHT COLORS	BLUE/WHITE OR ALL WHITE
WATTAGE	22W
AMP DRAW (@12V)	1.833A
INPUT VOLTAGE DC	9-32V DC

INTERIOR DOME LIGHT | FT-CU-AQX-DOME-W

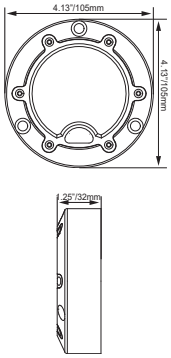

FT-CU-AQX-DOME-W

INTERIOR DOME LIGHT	
LEDS	6 X 3W
HOUSING COLOR	WHITE
WATTAGE	LOW 5.5W / HIGH 18.3W
INPUT VOLTAGE DC	9-32V DC
VIBRATION	8.7 G_{RMS}
IP RATING	IP68/69K

ENGINEERED IN THE UNITED STATES
LIFETIME WARRANTY

HIVIZ LIGHTING, INC.

149 Twin Springs Road
Hendersonville, NC 28792

P: (703) 662-3458

firetech@hivizleds.com
www.hivizleds.com

PRINTED IN PRC

COPYRIGHT © 2022 HIVIZ LIGHTING, INC.